M.Kumarasamy College of Engineering
NAAC Accredited Autonomous Institution
Approved by AICTE & Affiliated to Anna University
ISO 9001:2015 Certified Institution
Thalavapalayam, Karur - 639 113, TAMILNADU.

ECB1303 EMBEDDED SYSTEM DESIGN AND IOT

DUAL SOURCE WIRELESS CHARGING SYSTEM FOR ELECTRIC VEHICLES

A PROJECT REPORT

Submitted by

KANISHKA S	**(927623BEC102)**
KANISHKAA S	**(927623BEC103)**
KIRUBA D	**(927623BEC112)**

in partial fulfilment for the award of the degree

of

BACHELOR OF ENGINEERING

in

ELECTRONICS AND COMMUNICATION ENGINEERING

M.KUMARASAMY COLLEGE OF ENGINEERING, KARUR

DECEMBER 2025

M.KUMARASAMY COLLEGE OF ENGINEERING, KARUR

(Autonomous Institution affiliated to Anna University, Chennai)

BONAFIDE CERTIFICATE

Certified that this project report **"DUAL SOURCE WIRELESS CHARGING SYSTEM FOR ELECTRIC VEHICLES"** is the bonafide work of "**KANISHKA S (927623BEC102), KANISHKAA S (927623BEC0103), KIRUBA D(927623BEC112)"** who carried out the project work during the academic year 2025- 2026 under my supervision.

SIGNATURE
Dr.N.Mahendran, M.E., Ph.D
HEAD OF THE DEPARTMENT
Professor,
Department of Electronics and Communication Engineering,
M.Kumarasamy College of Engineering,
Thalavapalayam, Karur-639113

SIGNATURE
Dr.T.L.Kayathri,M.E.,Ph.D
SUPERVISOR
Assistant Professor,
Department of Electronics and Communication Engineering,
M.Kumarasamy College of Engineering,
Thalavapalayam, Karur-639113.

This Project Work ECB1303 EMBEDDED SYSTEM AND IOT DESIGN report has been submitted for the End Semester Project viva voce Examination held on _____.

INTERNAL EXAMINER **EXTERNAL EXAMINER**

VISION AND MISSION OF THE INSTITUTION

VISION

To emerge as a leader among the top institutions in the field of technical education.

MISSION

- Produce smart technocrats with empirical knowledge who can surmount the global challenges.
- Create a diverse, fully-engaged learner-centric campus environment to provide quality education to the students.
- Maintain mutually beneficial partnerships with our alumni, industry and professional associations.

DEPARTMENT OF ELECTRONICS AND COMMUNICATION ENGINEERING

VISION

To empower the Electronics and Communication Engineering students with emerging technologies, professionalism, innovative research and social responsibility.

MISSION

M1: Attain the academic excellence through innovative teaching learning process, research areas & laboratories and Consultancy projects.

M2: Inculcate the students in problem solving and lifelong learning ability.

M3: Provide entrepreneurial skills and leadership qualities.

M4: Render the technical knowledge and skills of faculty members.

PROGRAMME EDUCATIONAL OBJECTIVES (PEOs)

PEO1: Core Competence: Graduates will have a successful career in academia or industry associated with Electronics and Communication Engineering.

PEO2: Professionalism: Graduates will provide feasible solutions for the challenging problems through comprehensive research and innovation in the allied areas of Electronics and Communication Engineering.

PEO3: Lifelong Learning: Graduates will contribute to the social needs through lifelong learning, practicing professional ethics and leadership quality.

PROGRAM OUTCOMES(POs)

PO1: Engineering knowledge: Apply the knowledge of mathematics, science, engineering fundamentals, and an engineering specialization to the solution of complex engineering problems.

PO2: Problem analysis: Identify, formulate, review research literature, and analyze complex engineering problems reaching substantiated conclusions using first principles of mathematics, natural sciences, and engineering sciences.

PO3: Design/development of solutions: Design solutions for complex engineering problems and design system components or processes that meet the specified needs with appropriate consideration for the public health and safety, and the cultural, societal, and environmental considerations.

PO4: Conduct investigations of complex problems: Use research-based knowledge and research methods including design of experiments, analysis and interpretation of data, and synthesis of the information to provide valid conclusions.

PO5: Modern tool usage: Create, select, and apply appropriate techniques, resources, and modern engineering and IT tools including prediction and modelling to complex engineering activities with an understanding of the limitations.

PO6: The engineer and society: Apply reasoning informed by the contextual knowledge to assess societal, health, safety, legal and cultural issues and the consequent responsibilities relevant to the professional engineering practice.

PO7: Environment and sustainability: Understand the impact of the professional engineering solutions in societal and environmental contexts, and demonstrate the knowledge of, and need for sustainable development.

PO8: Ethics: Apply ethical principles and commit to professional ethics and responsibilities and norms of the engineering practice.

PO9: Individual and team work: Function effectively as an individual, and as a member or leader in diverse teams, and in multidisciplinary settings.

PO10: Communication: Communicate effectively on complex engineering activities with the engineering community and with society at large, such as, being able to comprehend and write effective reports and design documentation, make effective presentations, and give and receive clear instructions.

PO11: Project management and finance: Demonstrate knowledge and understanding of the engineering and management principles and apply these to one's own work, as a member and leader in a team, to manage projects and in multidisciplinary environments.

PO12: Life-long learning: Recognize the need for, and have the preparation and ability to engage in independent and life-long learning in the broadest context of technological change.

PROGRAM SPECIFIC OUTCOMES (PSOs)

PSO1: Applying knowledge in various areas, like Electronics, Communications, Signal processing, VLSI, Embedded systems etc., in the design and implementation of Engineering application.

PSO2: Able to solve complex problems in Electronics and Communication Engineering with analytical and managerial skills either independently or in team using latest hardware and software tools to fulfil the industrial expectations.

ACKNOWLEDGEMENT

We gratefully remember our beloved **Founder Chairman, (Late) Thiru. M. Kumarasamy**, whose vision and legacy laid the foundation for our education and inspired us to successfully complete this project.

We extend our sincere thanks to **Dr. K. Ramakrishnan, Chairman**, and **Mr. K. R. Charun Kumar, Joint Secretary**, for providing excellent infrastructure and continuous support throughout our academic journey.

We are privileged to extend our heartfelt thanks to our respected Principal, **Dr. B. S. Murugan, B.Tech., M.Tech., Ph.D.,** for providing us with a conducive environment and constant encouragement to pursue this project work.

We sincerely thank **Dr. N. Mahendran, B.E., M.E., Ph.D., Professor and Head, Department of Electronics and Communication Engineering**, for his continuous support, valuable guidance, and motivation throughout the course of this project.

Our special thanks and deep sense of appreciation go to our **Project Coordinator, Dr.P.Jeyakumar, M.E.,Ph.D., Assistant Professor Department of Electronics and Communication Engineering,** for her exceptional guidance, constructive suggestions, and unwavering support, all of which have been instrumental in the successful execution of this project.

We would also like to acknowledge **Dr.T.L Kayathri, M.E., Ph.D.,** Assistant Professor, our **Project Supervisor** for his constant encouragement, continuous supervision, and coordination that contributed to the smooth progress and completion of our project work.

We gratefully thank all the **faculty members of the Department of Electronics and Communication Engineering** for their timely assistance, valuable insights, and constant support during various phases of the project.

Finally, we extend our profound gratitude to our **parents and friends** for their encouragement, moral support, and motivation, without which the successful completion of this project would not have been possible.

ABSTRACT

This project presents the design and development of a Dual Source Wireless Charging System for Electric Vehicles (EVs), aimed at improving continuous charging efficiency and reducing range anxiety. Traditional EV charging depends on plug-in chargers or stationary wireless pads, which require the vehicle to stop for charging. In contrast, this project introduces a system that allows an electric vehicle to charge both while parked and while moving, using two independent power sources. The first source is a static wireless charging pad installed in parking areas or charging stations. The second source is a dynamic wireless charging track embedded under the roadway, enabling the vehicle to receive power wirelessly as it travels. The system uses resonant inductive coupling to transfer energy from the transmitter coils in the ground to the receiver coils underneath the vehicle, ensuring safe, efficient, and contactless power transfer. The dual-source approach ensures that the vehicle can maintain a sufficient battery level throughout the journey, even in long-distance travel. This method also reduces the need for large onboard battery capacity, which can lower vehicle weight and cost. To enhance efficiency, the system includes power conditioning circuits, coil alignment methods, and safety features to prevent energy loss or overheating. Experimental tests and simulations were carried out to study coil distance, alignment, efficiency levels, and charging performance under different conditions. Results show that the dual-source system provides a more stable charging rate and can significantly extend the operating time of electric vehicles. Overall, this project demonstrates a practical solution for future EV transportation, where wireless charging becomes seamless and continuous. The dual-source wireless charging technology can support smart cities, reduce dependence on charging stations, and encourage wider adoption of electric vehicles.

Abstract (Key words)	POs Mapping
Dual-source wireless charging, Electric vehicles (EVs), Dynamic wireless power transfer, Static wireless charging pad, Resonant inductive coupling, Range anxiety reduction, Smart transportation, Continuous charging system	PO1, PO2, PO3, PO4, PO5, PO6, PO7, PO8, PO9, PO10, PO11, PO12, PSO1, PSO2

SDG Goal		Remarks
SDG 7	This project aligns with global Sustainable Development Goals by promoting clean energy access, advancing innovative charging technology, and supporting sustainable power infrastructure.	Enhances charging reliability by providing uninterrupted power through dual energy sources.

Project Component	Relevant IEEE Standards
Wireless Power Transfer (Inductive & Resonant Charging)	IEEE P2878, IEEE P6334, IEEE SA Wireless Power Transfer Standards
Dual Source Power Management (Solar + Grid / Battery)	IEEE 1547 (Interconnection of Distributed Energy Resources), IEEE 2030 (Smart Grid Interoperability)
High-Frequency Inverter / Power Electronics	IEEE 946, IEEE 1676, IEEE 519 (Harmonics Control)
Magnetic Coupling, Coils & Alignment System	IEEE P2816, IEEE 1309 (Field Measurement), IEEE C95.1 (Safe Exposure Limits)
EV On-board Charging Interface	IEEE 2030.1, IEEE 2030.5, SAE J2954 (Industry Standard for WPT to EVs)
Communication Between EV & Charger (Authentication, Control)	IEEE 802.11, IEEE 802.15.4, IEEE 21451 (Smart Transducer Interface)

TABLE OF CONTENTS

CHAPTER No.	CONTENTS	PAGE No.
	INSTITUTION VISION AND MISSION	iii
	DEPARTMENT VISION AND MISSION	iii
	DEPARTMENT PEOs, POs AND PSOs	iv
	ABSTRACT	ix
	LIST OF TABLES	xii
	LIST OF FIGURES	xiii
	LIST OF ABBREVIATIONS	xiv
1	**INTRODUCTION**	**1**
	1.1 Overview of Electric Vehicle Technology	1
	1.2 Dual Source Wireless Charging System	2
	1.2.1 Working Principle	2
	1.2.2 Components of the System	3
	1.2.3 Need for the System	4
2	**LITERATURE SURVEY**	**6**
	2.1 A Comprehensive Review of Wireless Power Transfer Systems for Electric Vehicle Charging Applications	6
	2.2 Critical Review of Wireless Charging Technologies for Electric Vehicles	6
	2.3 Advances in EV Wireless Charging Technology – A Systematic Review and Future Trends	7

2.4 Solar-Integrated Wireless Charging System for Electric Vehicles 7
2.5 GaN-Based High-Power Multilevel Inverter for Wireless Power Transfer in Electric Vehicles 8
2.6 Design and Analysis of Dynamic Wireless Charging for Electric Vehicles 9
2.7 Inductive Power Transfer Using Dual-Coil Systems for EV Charging 9
2.8 Renewable Integrated Charging Architecture for Electric Vehicles 10
2.9 A Review on High-Frequency Resonant Converters for Wireless EV Charging 10

3 EXISTING SYSTEM` 14
3.1 Conventional Wired Charging in Electric Vehicles 14
3.2 Limitations of Single-Source Wireless Charging Systems 14
3.3 Dependence on Grid-Based Power Supply 15
3.4 Lack of Backup or Dual-Power Integration 17
3.5 Inefficiency Due to Coil Misalignment In Wireless Charging 18
3.6 Absence of Intelligent Monitoring and Control Systems 19

4	**PROBLEM STATEMENT**	22
5	**PROPOSED SYSTEM**	23
6	**HARDWARE DESCRIPTION**	28
7	**RESULTS AND DISCUSSION**	33
8	**CONCLUSION AND FUTURE WORK**	38
	APPENDICES	42
	REFERENCES	45

LIST OF TABLES

TABLE No.	TITLE	PAGE No.
2.11	Table summary	11
5.3	Block description	27
7.1	Tools used	34

LIST OF FIGURES

FIGURE No.	TITLE	PAGE No.
3.1	Existing Working principle	17
3.2	Existing circuit	20
5.1	Transmitter Block	24
5.2	Receiver Block	25
7.1	Hardware Setup	36
7.2	Cloud Result	37
7.3	Voltage Monitoring	37

LIST OF ABBREVIATIONS

ACRONYM		ABBREVIATION
BMS	-	Battery Management System
EV	-	Electric Vehicle
WPT	-	Wireless Power Transfer
DWPT	-	Dynamic Wireless Power Transfer
SWPT	-	Static Wireless Power Transfer
DSWCS	-	Dual Source Wireless Charging System
ICPT	-	Inductive Coupling Power Transfer
RIPT	-	Resonant Inductive Power Transfer
EMF	-	Electromagnetic Field
EMI	-	Electromagnetic Interference

CHAPTER 1
INTRODUCTION

1.1 Overview of Electric Vehicle Technology

A Dual Source Wireless Charging System for Electric Vehicles represents a next-generation solution aimed at delivering seamless, contactless, and highly efficient charging without relying on traditional plug-in cables. At its core, the system utilizes resonant inductive power transfer, where energy is transmitted from a primary coil placed on the ground to a secondary coil mounted on the EV. This eliminates the need for physical connectors, reduces wear and tear, and minimizes user involvement. What makes this system superior to conventional wireless chargers is the integration of two independent power sources—solar energy and the electrical grid. During daytime, the solar power unit generates clean electricity, which is fed into the wireless charging pad. When sunlight is insufficient or unavailable, the system automatically switches to the grid using an intelligent power management module. This ensures that the charging process remains uninterrupted regardless of environmental conditions, improving system reliability and user convenience.Beyond providing continuous power, the dual-source approach significantly enhances sustainability and operational efficiency. By prioritizing solar energy, the system reduces grid dependency, lowers electricity costs, and supports global goals for renewable energy adoption. The wireless charging interface also includes advanced features such as real-time monitoring, fault detection, and automatic alignment assistance, ensuring safe and optimal energy transfer at all times.

1.2 Dual Source Wireless Charging System

1.2.1 Working Principle

The proposed Dual Source Wireless Charging System for electric vehicles operates on the principle of inductive wireless power transfer, which enables contactless energy delivery from the ground to the vehicle. In this setup, a transmitter coil embedded in the charging pad or roadway is energized using electricity from either the solar power source or the grid. When an alternating current flows through the transmitter coil, it generates a high-frequency magnetic field around the coil. The receiver coil, installed beneath the electric vehicle, is positioned to intercept this magnetic flux. Through electromagnetic induction, the receiver coil converts the alternating magnetic field into electrical energy, which is then rectified and conditioned to charge the EV battery. The resonant tuning of both the transmitter and receiver coils ensures maximum energy transfer efficiency, even across small air gaps, making the system highly reliable and efficient in real-world conditions.

The dual-source functionality adds intelligence and resilience to the system. When solar energy is available, the system prioritizes it, providing renewable and cost-effective power while reducing grid dependency. In conditions of low sunlight or at night, the system automatically switches to the electrical grid, ensuring uninterrupted charging. A control unit or microcontroller continuously monitors voltage, current, and battery state-of-charge, managing source switching and regulating power output to maintain optimal charging conditions. It also implements safety protocols such as overvoltage protection, overcurrent control, and foreign object detection to prevent hazards. By intelligently combining dual power sources with real-time monitoring and control

1.2.2 Components of the System

The proposed Dual Source Wireless Charging System for electric vehicles integrates several critical components that work together to ensure safe, efficient, and continuous power delivery. At the source side, a solar panel captures renewable energy, which is then managed by a charge controller to regulate voltage and current, preventing overcharging or damage to the system. The grid supply unit serves as an alternative or supplementary power source when solar energy is insufficient, ensuring uninterrupted operation. Both power sources feed into an inverter, which converts DC power into high-frequency AC necessary for wireless energy transfer. The transmitter coil embedded in parking areas or roadway tracks generates a magnetic field when energized, which is captured by the receiver coil installed under the vehicle. The captured AC power is then converted back to DC using a rectifier, making it suitable for charging the EV battery.

In addition to the primary power components, the system relies heavily on sensors, controllers, and a battery management module (BMS) to maintain operational safety and efficiency. Sensors monitor parameters such as coil alignment, temperature, and current flow to prevent overheating or system faults. The controllers coordinate source switching between solar and grid, regulate voltage, and optimize power transfer in real time. The BMS ensures that the battery receives the correct charging profile, maintains state-of-charge monitoring, and prevents overvoltage or deep discharge, thereby extending battery life. Each component plays a critical role in achieving a robust and reliable wireless charging ecosystem, making the system suitable for both static and dynamic charging scenarios while supporting energy efficiency, sustainability, and user convenience. This combination of advanced components

ensures that energy is transferred effectively, safely, and continuously to the vehicle without manual intervention.

1.2.3 Need for the System

With the rapid growth of electric vehicles on modern roadways, there is a critical need for charging solutions that combine convenience, safety, and energy efficiency. Traditional plug-in chargers require manual connection, which exposes users to risks such as cable wear, connector damage, and potential electric hazards. These systems are also limited by dependence on a single power source, usually the electrical grid, making them vulnerable to outages, voltage fluctuations, and higher operational costs. The dual source wireless charging system overcomes these challenges by providing automated, contactless energy transfer through inductive coupling, eliminating the need for physical cables. Users no longer need to plug in or monitor the charging process continuously, reducing both labor requirements and the risk of accidents associated with manual handling. This automated approach ensures that charging is simpler, safer, and more reliable in everyday use.

In addition to convenience and safety, the system provides significant energy efficiency and sustainability benefits. By integrating solar energy with grid power, the charger can prioritize renewable sources whenever available, reducing dependence on conventional electricity and lowering energy costs. The dual-source functionality also ensures continuous, 24/7 charging, whether the vehicle is stationary or in motion over dynamic charging tracks, thereby reducing range anxiety and maintaining optimal battery levels during long journeys. Intelligent controllers, sensors, and the battery management module

optimize energy flow, prevent overcharging, and ensure proper voltage regulation, extending battery life and system reliability. Furthermore, the system supports smart city infrastructure by enabling seamless, eco-friendly, and uninterrupted charging for electric vehicles. Overall, these advantages make the dual source wireless charging system a transformative solution, combining automation, sustainability, and operational efficiency for the next generation of EV technology.

CHAPTER 2
LITERATURE REVIEW

2.1 A Comprehensive Review of Wireless Power Transfer Systems for Electric Vehicle Charging Applications

Author: S. Das, P. R. Kumar, and A. Roy (2025)

This paper provides an in-depth analysis of modern Wireless Power Transfer (WPT) technologies designed for electric vehicle charging, focusing on resonant inductive coupling and the electromagnetic principles that govern energy transmission. It explains how coil geometry, compensation topologies, and resonant frequencies influence efficiency, power transfer distance, and thermal behavior of charging systems. The authors also highlight challenges such as magnetic field leakage, coil misalignment tolerance, thermal stress on components, and compliance with electromagnetic safety standards. Additionally, the paper proposes optimization strategies using improved compensation networks, shielding materials, and adaptive alignment mechanisms. This review forms a strong theoretical foundation for our project by detailing essential WPT parameters and limitations, enabling the development of more reliable dual-source wireless charging architectures.

2.2 Critical Review of Wireless Charging Technologies for Electric Vehicles

Author: M. George and A. Patel (2025)

This study examines multiple wireless charging methods, including inductive, resonant, and multi-coil WPT architectures, comparing their efficiency, operational frequency ranges, and alignment tolerance. The authors identify practical issues such as increased power loss during lateral or angular misalignment, switching limitations of semiconductor devices at high

frequencies, and the requirement for precise coil positioning for maximum coupling. They also emphasize the significance of high-performance converters, soft-switching techniques, and advanced control algorithms to regulate power transfer under varying load conditions. The paper concludes that poorly regulated systems face instability, especially when the input source fluctuates. This directly supports our dual-source design, as a hybrid power model helps compensate for such variations, ensuring continuous and efficient energy delivery.

2.3 Advances in EV Wireless Charging Technology – A Systematic Review and Future Trends

Author: R. Singh and K. Murthy (2024)

This systematic review covers next-generation developments in EV wireless charging, including high-frequency Class-E and Class-D inverters, dynamic in-motion charging pads, and automatic alignment correction using embedded sensors. The authors analyze how technological improvements like high-speed communication links, AI-based control systems, and modular coil array structures increase reliability and adaptability in real-world conditions. They also highlight limitations such as increased EMI at higher frequencies, thermal management issues, and the need for interoperability between charging infrastructures. The proposed solutions—including intelligent compensation tuning and modular power sources—provide vital insights for our project. Their findings show how integrating dual power sources can smooth out wireless charging irregularities and maintain stable voltage levels under varying vehicle speeds and coil offsets.

2.4 Solar-Integrated Wireless Charging System for Electric Vehicles

Author: A. Saleh and S. Ahmed (2025)

This research presents a hybrid system where solar photovoltaic (PV) energy is directly integrated with a wireless charging platform for EVs. Using simulation and analytical models, the authors investigate the impact of solar irradiance variations on wireless charging stability and power flow continuity. They demonstrate that solar integration effectively reduces grid dependency, lowers operational cost, and enhances sustainability, especially when paired with MPPT algorithms and energy storage units. The study also shows how real-time switching between PV and grid power mitigates charging interruptions caused by fluctuating environmental conditions. These findings strongly support our project's objective, as dual-source systems similarly combine renewable and conventional power channels to ensure strong, reliable, and eco-friendly wireless charging.

2.5 GaN-Based High-Power Multilevel Inverter for Wireless Power Transfer in Electric Vehicles

Author: Y. Zhang and T. Nakamura (2024)

This paper introduces a high-performance GaN-based multilevel inverter designed for supplying high-frequency AC signals required in WPT systems. The use of Gallium Nitride (GaN) devices significantly reduces switching losses, enhances thermal stability, and allows operation at higher switching frequencies compared to traditional silicon-based inverters. The authors show that multilevel topologies improve output waveforms, minimize harmonic distortion, and increase overall power delivery efficiency. These performance improvements are crucial for wireless charging applications where stable high-frequency excitation is necessary. The relevance to our dual-source system lies in the need for

efficient and robust power converters that can handle dynamic input variations and deliver consistent wireless power across both energy sources.

2.6 Design and Analysis of Dynamic Wireless Charging for Electric Vehicles

Author: J. Lee and H. Park (2024)

This paper investigates dynamic wireless charging, where EVs receive charging power while moving over embedded coil tracks. The authors analyze electromagnetic field distribution, magnetic coupling variation with vehicle speed, and the influence of coil segmentation on charging stability. Their experimental results show that power transfer efficiency fluctuates significantly at higher speeds due to reduced coupling time and misalignment. They emphasize the requirement for fast-response power control, seamless coil switching, and real-time compensation tuning to maintain efficient charging. This work supports our project by demonstrating that hybrid or dual-power inputs can help stabilize power delivery during such fluctuations, ensuring consistent charging in both stationary and dynamic scenarios.

2.7 Inductive Power Transfer Using Dual-Coil Systems for EV Charging

Author: V. Rao and N. Prakash (2023)

This study focuses on a dual-coil IPT architecture designed to enhance power transfer distance, alignment tolerance, and magnetic coupling quality. The authors show that using primary and secondary coil pairs with optimized spacing reduces sensitivity to lateral and angular displacement, enabling more flexible vehicle positioning. Their approach improves the effective charging radius and reduces losses typically associated with coil misalignment. They also analyze the mutual inductance behavior under different coil configurations and propose improved compensation topologies for better efficiency. This work directly

connects to our project, as maintaining stable power despite wireless efficiency fluctuations is a key objective of dual-source wireless charging systems.

2.8 Renewable Integrated Charging Architecture for Electric Vehicles

Author: T. Mehta and L. Fernandes (2024)

This paper evaluates renewable-integrated EV charging frameworks incorporating solar, wind, and hybrid energy storage units. The authors discuss power-sharing strategies, DC–DC converter selection, battery management techniques, and intelligent load balancing to maximize renewable utilization. The architecture is shown to reduce grid stress, promote sustainability, and enable continuous power supply even during peak demand conditions. Their findings provide meaningful insights for dual-source charging systems, where renewable power can act as a supplementary input to enhance stability, improve efficiency, and reduce operating costs.

2.9 A Review on High-Frequency Resonant Converters for Wireless EV Charging

Author: S. Gupta and R. Laxman (2024)

This study reviews high-frequency resonant converter topologies, including LLC, LCC, and series-parallel compensation networks used in WPT systems. It explains how resonant tanks achieve zero-voltage or zero-current switching, thereby reducing switching losses and improving converter lifespan. The authors also discuss electromagnetic interference (EMI) issues, challenges of controlling resonant converters under varying loads, and the need for precise frequency tuning to maintain soft-switching conditions. The insights are vital for our project's power electronics design, where achieving stable high-frequency operation is essential to ensure efficient wireless energy transfer.

2.11 Table -Summary

Title	Year	Author(s)	Technique Used	Advantages	Limitations
A Comprehensive Review of Wireless Power Transfer Systems for Electric Vehicle Charging Applications	2025	S. Das, P. R. Kumar, A. Roy	Resonant inductive coupling, compensation networks, coil geometry optimization	High efficiency, strong theoretical foundation, improved coupling performance	Sensitive to misalignment, electromagnetic leakage, safety issues
Critical Review of Wireless Charging Technologies for Electric Vehicles	2025	M. George, A. Patel	Inductive, resonant, and multi-coil WPT techniques	Better understanding of converter performance, identifies control requirements	Power loss due to misalignment, need for accurate positioning
Advances in EV Wireless Charging Technology – A Systematic Review and Future Trends	2024	R. Singh, K. Murthy	High-frequency inverters, dynamic charging pads.	Supports stable charging, identifies modern improvements, modular coil benefits	High implementation cost, tuning complexity

Title	Year	Author(s)	Technique Used	Advantages	Limitations
GaN-Based High-Power Multilevel Inverter for Wireless Power Transfer in EVs	2024	Y. Zhang, T. Nakamura	GaN-based multilevel inverter, high-frequency switching	Low switching loss, high efficiency, improved waveform	High device cost, thermal management required
Design and Analysis of Dynamic Wireless Charging for Electric Vehicles	2024	J. Lee, H. Park	Dynamic WPT with moving vehicle coil placement analysis	Enables charging while driving, compensates alignment changes	Difficult to maintain stable transfer at high speed
Inductive Power Transfer Using Dual-Coil Systems for EV Charging	2023	V. Rao, N. Prakash	Dual-coil inductive power transfer	Higher alignment tolerance, improved coupling efficiency	Complexity in coil design, limited long-distance transfer
Renewable Integrated Charging Architecture for Electric Vehicles	2024	T. Mehta, L. Fernande	Hybrid renewable (solar/wind) + EV charging	Less grid load, supports dual-source operation	Requires storage systems, variable renewable output

Table 2.11 Describe a comparative summary of key research studies related to wireless power transfer technologies for electric vehicle charging. It highlights each paper's title, year, authors, techniques used, and evaluates their advantages and limitations.

CHAPTER 3
EXISTING SYSTEM

3.1 Conventional Wired Charging in Electric Vehicles

In traditional electric vehicle (EV) charging systems, electrical power is delivered to the vehicle through a physical cable that connects the external charger to the EV's onboard charging port. This method relies entirely on manual operation, where the user must correctly insert the plug, ensure that the connector is fully engaged, and begin the charging process. The entire setup lacks automation, meaning the user is responsible for supervising the connection and verifying that charging has initiated properly. Most existing public and residential charging stations still operate with conventional plug-in connectors, which require regular handling and maintenance. These connectors are prone to wear and tear, dust accumulation, environmental exposure, and mechanical damage, all of which can affect the quality of the electrical connection. As a result, wired charging becomes highly dependent on precise human interaction, careful insertion of cables, and continuous monitoring—making the process less convenient compared to modern automated charging technologies.

Another major challenge with wired charging is the delayed identification of faults. Users typically notice issues such as loose cable connections, overheating of the plug, bent pins, exposed wires, or incomplete insertion only after the vehicle either stops charging or reflects an error on the dashboard. These faults can occur gradually due to long-term usage or suddenly due to mishandling, making it difficult to predict or prevent failures. The manual nature of this system often introduces safety risks like electric shock, sparking, or thermal

build-up in damaged connectors. Moreover, when the cable connection is weak or unstable, the charger may supply inconsistent power, leading to slow charging, energy wastage, and reduced efficiency. Because users identify these problems only when the charging output becomes abnormal, the wired approach is considered labour-intensive, inconvenient, and prone to operational hazards. Overall, conventional wired charging lacks automation, reliability, and safety assurance, making it less suitable for modern EV applications where efficiency and user convenience are critical.

3.2 Limitations of Single-Source Wireless Charging Systems

Some existing wireless charging systems used in electric vehicles rely on a single inductive power transfer (IPT) unit to transmit energy from the ground-based coil to the onboard receiving coil. This approach eliminates the need for conventional charging cables and provides a more user-friendly and automated solution. However, despite the convenience offered by cable-free charging, these systems still depend entirely on a single input source—most commonly the electrical grid. This single-source dependence means that the charging infrastructure operates without any form of backup or secondary power route. In practical scenarios, these systems are highly vulnerable to grid fluctuations, voltage drops, or sudden interruptions in power supply. Since inductive charging already requires precise frequency control, stable voltage levels, and continuous power flow, any minor disturbance in grid supply directly affects the charging performance. This dependence on one source also limits scalability, reliability, and flexibility, especially in regions with weak or unstable electrical infrastructure.

Although wireless charging improves safety and eliminates handling-related

issues, single-source inductive systems suffer from technical limitations that significantly affect their real-world performance. One of the major challenges is coil misalignment, where even a small shift in the position of the vehicle relative to the ground coil can cause a drastic reduction in magnetic coupling. This results in lower power transfer efficiency, increased heat generation, and longer charging time. In some cases, the system may fail to initiate charging altogether. Additionally, during power cuts or low-voltage conditions, the entire wireless charging operation stops immediately since no alternative source is available to sustain the power flow. These disruptions not only reduce system reliability but also lead to considerable energy losses before the fault is detected. Since the user is often unaware of the misalignment or voltage instability until the vehicle fails to charge properly, these systems become inefficient, inconsistent, and unsuitable for applications that demand continuous, uninterrupted charging. Overall, single-source wireless chargers lack robustness, adaptability, and fault tolerance, highlighting the necessity for advanced dual-source or hybrid wireless charging architectures.

3.3 Dependence on Grid-Based Power Supply

Most existing electric vehicle (EV) charging infrastructures are designed shown in the figure 3.1 to operate solely on grid electricity, making the electrical grid the only source of input power for the charging process. While this setup simplifies the design of charging stations, it creates a strong dependency on the stability and availability of the grid. In many regions, especially developing or rural areas, the electrical grid is frequently affected by load fluctuations, voltage drops, unplanned shutdowns, and peak-hour demand surges. These fluctuations directly impact the performance of EV chargers, which require a stable power

supply to maintain efficient and safe charging levels. Additionally, during peak demand periods, utilities often reduce output or shift loads, which further reduces the quality of the charging process. This single-source dependency increases system vulnerability because even minor disturbances in the grid can immediately affect charging reliability, efficiency, and user experience.

During power cuts, low-voltage conditions, or unstable grid behaviour, the entire charging process slows down significantly or stops altogether. Since there is no alternative power route, EV users are often left with an incomplete charging cycle, making it difficult to rely on the vehicle for emergency or long-distance travel. This problem is even more severe in areas with poor grid infrastructure, where frequent outages and voltage instability are common. In such environments, users experience long waiting times, higher charging costs, and inconsistent charging performance. Furthermore, because faults or power interruptions are detected only after the vehicle stops charging or displays an error, the usability and reliability of grid-dependent chargers are reduced. The lack of backup sources not only creates operational inconvenience but also limits the expansion of EV adoption in regions where stable grid access is not guaranteed. Therefore, exclusive reliance on grid power highlights the need for introducing hybrid or dual-source charging solutions that ensure uninterrupted charging and enhanced system resilience.

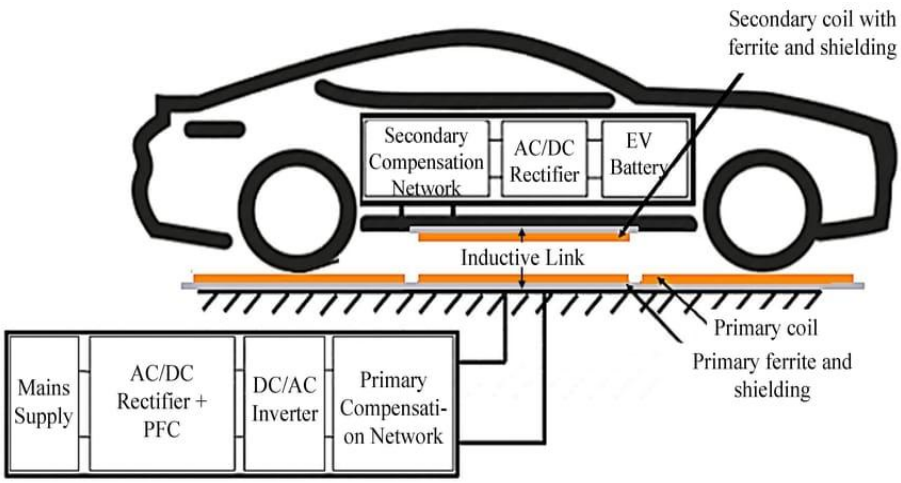

Figure 3.1 Existing working principle

3.4 Lack of Backup or Dual-Power Integration

Present-day EV charging systems are predominantly designed to operate using a single power source, typically grid electricity, and lack integration with alternative energy options such as solar panels, wind power, or dedicated battery backup units. This absence of dual-source capability means that the charger cannot automatically switch to another power input when one fails. As a result, the entire charging process becomes dependent on a single, uninterrupted supply. The lack of redundancy also limits flexibility in energy management and prevents users from utilizing clean, renewable energy sources that could significantly reduce operational costs and environmental impact. Without solar or stored battery energy integration, charging stations remain fixed to the limitations of conventional electrical infrastructure, restricting their efficiency, sustainability, and adaptability in different operational environments.

Due to this design limitation, the reliability of EV charging systems is significantly compromised, especially during long-duration charging cycles where power interruptions are more likely to occur. When the primary power

source experiences fluctuations, outages, or voltage instability, the charging process stops immediately, leaving the vehicle in an incomplete or partially charged state. This not only causes inconvenience to users but also increases dependence on manual monitoring to ensure continuous operation. Furthermore, the lack of sustainable power integration discourages the adoption of green energy solutions that could otherwise reduce carbon footprint and long-term operational expenses. In the absence of built-in backup mechanisms or intelligent power switching, existing EV chargers are unable to guarantee consistent performance, making them unsuitable for regions with unstable grid supply or for users seeking eco-friendly and resilient charging infrastructure. This clearly highlights the need for advanced dual-source or hybrid charging systems that offer uninterrupted, efficient, and sustainable power delivery.

3.5 Inefficiency Due to Coil Misalignment in Wireless Charging

Existing wireless charging pads for electric vehicles depend heavily on precise coil alignment between the transmitter placed on the ground and the receiver mounted on the vehicle's underside. Wireless power transfer operates based on magnetic coupling, which requires both coils to be positioned accurately for maximum efficiency. Even small deviations—such as parking slightly off-center, angling the vehicle incorrectly, or stopping a few centimeters away from the intended position—can significantly weaken the magnetic field interaction. As a result, the amount of power transferred drops sharply, leading to slower charging rates and higher energy losses. Since most wireless charging systems lack automatic alignment detection or correction mechanisms, users must rely on visual judgment or manual adjustments, which are often inaccurate. This dependency on perfect positioning makes the technology less user-friendly and

reduces its real-world practicality.

Because misalignment issues are not immediately obvious, they often go unnoticed until the vehicle displays incomplete or abnormally slow charging progress. Users may only realize the problem after several hours when the expected state of charge has not been reached. Such delays make the entire process time-consuming and unreliable, especially for users who depend on timely and efficient charging for daily travel. The inefficiency caused by misalignment increases overall energy consumption and reduces the cost-effectiveness of wireless charging systems. Additionally, repeated episodes of partial or interrupted charging sessions lead to user dissatisfaction and discourage widespread adoption of wireless charging technology. Without intelligent alignment assistance, real-time sensing, or automatic compensation techniques, existing systems struggle to maintain consistent performance. This highlights the importance of introducing advanced coil positioning technology, adaptive compensation circuits, or guided parking mechanisms to ensure reliable, efficient, and user-friendly wireless charging.

3.6 Absence of Intelligent Monitoring and Control Systems

Current EV charging units lack advanced real-time monitoring capabilities and intelligent control systems that are essential for ensuring safe, efficient, and uninterrupted charging. Most traditional chargers operate passively, meaning they simply deliver power without actively checking for conditions such as voltage fluctuations, overheating, misalignment, abnormal current flow, or incomplete charging cycles. Because they do not possess automated diagnostic features, these systems fail to alert users about issues like power interruptions,

coil displacement, or inefficient energy transfer during the charging process. Without sensors and smart algorithms, the charger cannot analyze its own performance or optimize charging parameters based on real-time conditions. This makes the charging process less efficient, more error-prone, and heavily dependent on manual supervision by the user.

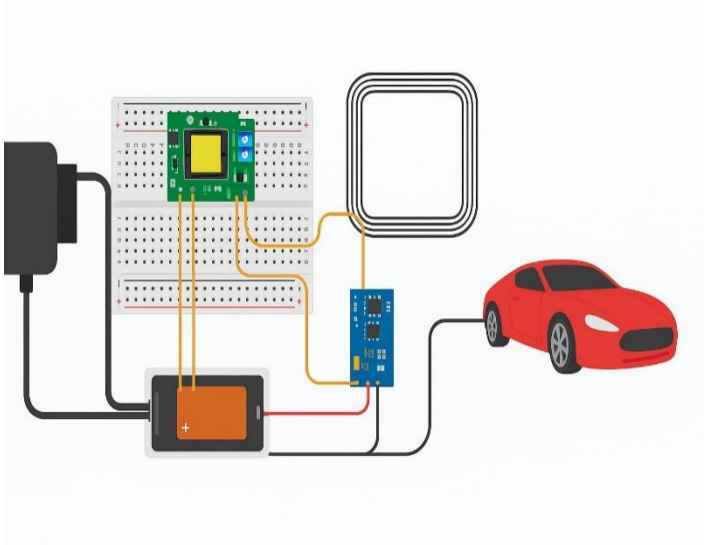

Figure 3.2 Existing circuit

The absence of intelligent control mechanisms also prevents these systems from the figure 3.2 switching between available power sources, balancing load, or utilizing renewable energy efficiently. For example, if there is a grid failure or voltage drop, conventional chargers do not automatically shift to an alternative supply like solar power or battery backup. This results in sudden charging interruptions, incomplete cycles, and prolonged charging duration. Additionally, without IoT-based monitoring features, users cannot track the charging status remotely or receive alerts about faults or inefficiencies. This limitation reduces system reliability and can lead to increased operational costs due to unnoticed

losses or repeated failures. In a world moving toward smart infrastructure and digital automation, the lack of intelligent charging systems slows down technological adoption and hinders the development of dependable and sustainable EV ecosystems. Incorporating smart monitoring, automated fault detection, adaptive power management, and cloud-based analytics is essential to overcoming these challenges and ensuring the next generation of EV charging is efficient, safe, and convenient.

CHAPTER 4

PROBLEM STATEMENT

The rapid growth of electric vehicles has created a strong demand for efficient, safe, reliable, and user-friendly charging infrastructure. However, most existing EV charging systems rely on conventional plug-in methods and single grid-based power sources. These systems suffer from several limitations such as manual handling of cables, safety risks in wet or outdoor environments, connector wear and tear, lack of automation, and complete dependency on non-renewable grid electricity. In addition, existing wireless charging systems often face issues like unstable power transfer, misalignment losses, lack of intelligent monitoring, and the absence of renewable energy integration. The unavailability of automatic source switching and real-time control further reduces charging reliability and energy efficiency. Therefore, there is a critical need to develop an advanced charging solution that overcomes these drawbacks by combining wireless power transfer with renewable energy integration and intelligent control. This project aims to address these challenges by designing a Dual Source Wireless Charging System for Electric Vehicles that ensures continuous, safe, eco-friendly, and efficient charging using both solar and grid power with automated monitoring and control.

CHAPTER 5
PROPOSED SYSTEM

The proposed system introduces an innovative Dual Source Wireless Charging System designed to provide continuous and uninterrupted charging for electric vehicles in both static and dynamic conditions. Unlike conventional systems that depend on a single charging method, this design incorporates two independent wireless power transfer mechanisms—a static charging pad placed in parking locations and a dynamic charging strip embedded beneath the roadway surface.
When the vehicle is parked, the static ground pad transfers energy to the receiver coil mounted on the underside of the vehicle through high-efficiency resonant inductive coupling, ensuring stable and contactless power delivery. During motion, the vehicle moves over a dynamic charging lane consisting of sequential transmitter coils. These coils are activated only when a vehicle is detected, enabling safe and efficient power transfer while the vehicle is in motion. The received AC power is routed through a power conditioning circuit, where it is rectified, filtered, and regulated before being stored in the EV battery. This dual-source framework not only provides operational flexibility but also ensures that the vehicle receives energy regardless of whether it is stationary or moving.

By enabling charging in real time, the proposed system significantly reduces range anxiety, a major barrier to EV adoption, by maintaining the vehicle's battery level even during extended travel. The system also reduces dependency on plug-in chargers, minimizing user involvement and eliminating issues related to cable handling, connector wear, and charging port damage. Because the vehicle receives continuous top-up charging, the overall battery capacity and

vehicle weight can be reduced, leading to improved efficiency and lower manufacturing costs. Furthermore, the system incorporates several critical safety and reliability mechanisms, including foreign object detection (FOD) to prevent heating hazards, vehicle–infrastructure communication for dynamic coil activation, and automatic alignment correction assistance to maintain optimal power transfer efficiency. This dual-source wireless charging architecture supports future smart transportation networks and paves the way for fully automated charging ecosystems where electric vehicles can seamlessly receive energy without stopping or manual intervention. Overall, the proposed system offers a transformative solution for next-generation EV infrastructure by combining convenience, safety, sustainability, and intelligent energy management.

5.1 BLOCK DIAGRAM

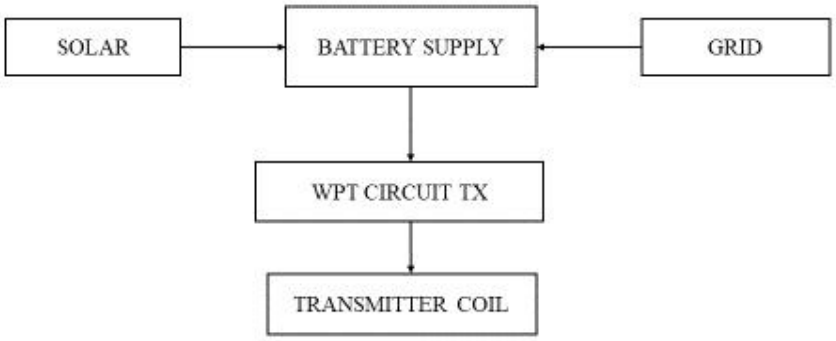

Figure 5.1 Transmitter Block

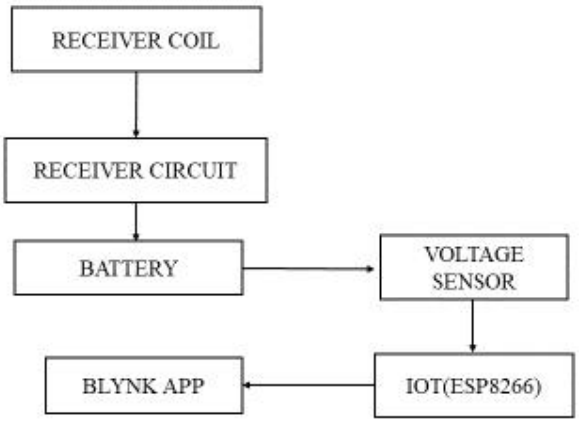

Figure 5.2 Receiver Block

The block diagram Figure 5.1 of the Dual Source Wireless Charging System consists of two transmitter sections and one receiver section that work together to provide continuous charging. The first transmitter section is the static charging pad, which includes an AC supply, high-frequency inverter, compensation network, and transmitter coil. When the vehicle is parked above this pad, the inverter converts electrical power into high-frequency AC, and the coil generates a magnetic field. This magnetic field induces voltage in the receiver coil placed underneath the vehicle.

The second transmitter section is the dynamic charging track installed under the road surface. It contains multiple coil segments controlled by a detection circuit. When the vehicle enters the charging lane, sensors identify its presence and activate only the coil segment directly below the vehicle to reduce energy loss. These coils also generate a magnetic field using resonant inductive coupling. As the vehicle moves over each segment, power is transferred continuously from one segment to the next.This magnetic field couples wirelessly with the Receiver

Coil located on the underside of the electric vehicle. Through resonant inductive coupling, the alternating magnetic field induces AC voltage in the receiver coil. The amount of induced voltage depends on the coil distance, alignment, and magnetic coupling coefficient.. This unit converts the AC back into stable DC and filters out ripples using LC filters. It also integrates protective circuits such as over-current protection, surge protection, and thermal management to ensure reliable operation.

Figure 5.2 Describe the conditioned DC power is further processed by the Battery Management System (BMS), which regulates the charging process of the EV battery. The BMS continuously monitors battery parameters including voltage, temperature, state of charge, and state of health, ensuring safe and optimized charging. To enhance system intelligence and user accessibility, an IoT Monitoring and Control Unit is incorporated. This unit measures real-time charging data such as voltage, current, coil temperature, source selection status, and battery level. Using communication modules like Wi-Fi or Bluetooth, it transmits the information to a cloud platform or mobile application for remote monitoring and control.

The receiver section in the vehicle includes a receiver coil, rectifier, filter, and battery charging controller. The receiver coil picks up the magnetic energy from either static or dynamic transmitters. The rectifier converts the induced AC voltage into DC, and the filter smooths the output. The battery charging controller ensures safe charging by regulating voltage and current before sending power to the EV battery. A communication unit maintains coordination between the vehicle and the transmitter. It helps manage power flow, detect alignment, and ensure safety.

5.3 TABLE -Block Description

S.No	Parameter / Component	Description	Advantage in Proposed System
1	Dual Source Input	Combines solar power + grid/AC supply	Ensures continuous charging even when one source is unavailable
2	Wireless Power Transfer (WPT)	Uses inductive or resonant inductive coupling	Safe, contactless charging while vehicle is moving/parked
3	Transmitter Coil	Mounted on roadside/charging pad	Efficient magnetic field generation for power transfer
4	Receiver Coil	Mounted at bottom of EV	Captures energy wirelessly and sends to power converter
5	Power Conditioning Unit	Converts AC/DC, regulates voltage and current	Provides stable charging output for battery protection
6	Compensation Network	Series/parallel LC compensation	Maximizes efficiency and reduces losses
7	Battery Management System (BMS)	Monitors battery health, SOC, temperature	Prevents over–charging and overheating
8	Energy Storage (Solar Battery)	Stores excess solar energy for later use	Enables charging even during night/cloudy weather
9	Safety Features	Overcurrent, overvoltage, temperature protection	Improves reliability and user safety

The table 5.3 show the outlines of key components involved in the dual-source wireless charging system for electric vehicles, including solar input, wireless power transfer coils, receiver unit, power conditioning, compensation network, and battery management system.

CHAPTER 6

HARDWARE DESCRIPTION

6.1 Microcontroller (Arduino UNO)

Features:

- 8-bit AVR controller (ATmega328P).
- 16 MHz clock frequency.
- 10-bit ADC for accurate analog readings (0–5 V).
- 14 digital I/O pins (6 PWM outputs).
- Serial communication: UART, I2C (Wire), SPI.
- Low power modes and easy programming via USB.

Function in the system:

- Reads analog voltages from current sensors, voltage dividers and temperature sensors (units: V, A, °C).
- Performs ADC conversion and scaling to physical units (V → V, ADC counts → A via shunt calibration).
- Implements control logic for switching between grid/renewable sources and enabling wireless transmitter.
- Communicates with higher-level controller/BMS via UART/CAN or Bluetooth for status and logging.
- Drives indicator LEDs, user interface buttons and relays for isolation.

- Typical specs / units: ADC resolution = 10 bits (0–1023), ADC reference = 5 V, I/O voltage = 5 V, program memory = 32 KB.

6.2 Wireless Power Transfer Module (Transmitter & Receiver Coils)

Features:

- Transmitter (Tx) coil: planar spiral coil with ferrite backing for coupling.
- Receiver (Rx) coil: matched spiral coil integrated into vehicle pad.
- Operating frequency: resonant frequency ≈ 85 kHz (typical for EV WPT) or tuned resonant frequency used in design.
- Quality factor (Q) optimized for efficiency (Q > 30 typical).
- Ferrite and shielding to reduce stray fields and eddy losses.
- Alignment tolerance and guidance features (mechanical/optical sensors).

Function in the system:

- Transforms inverter high-frequency AC into magnetic field (Tx) and induces AC in Rx coil.
- Works with resonant capacitors to maximize power transfer at resonant frequency (units: kHz).
- Delivers AC to rectifier and DC-DC stage on vehicle side; transmits power up to rated power (units: kW).
- Includes Foreign Object Detection (FOD) sensors to detect metallic objects and stop transmission for safety.
- Provides feedback (coupling coefficient, coil temperature) to the microcontroller to adjust power or abort charging.

- Typical specs / units: Rated power 3.3 kW — 11 kW (choose per system), coil diameter 200–350 mm (vehicle pad), resonant frequency 85 kHz, coupling coefficient k ≈ 0.1–0.3.

6.3 Power Electronics (Transmitter Inverter & Receiver Rectifier / DC-DC)

Features:

- Tx-side inverter: full-bridge or half-bridge high-frequency inverter using MOSFETs/IGBTs.
- Resonant network (series or series-parallel) to form LC resonance with coils.
- Rx-side rectifier: synchronous/full-wave rectifier to convert induced AC to DC.
- DC-DC converter: isolated or non-isolated converter to regulate battery charging voltage/current.
- Protection devices: overcurrent, overvoltage, thermal shutdown, EMI filters.

Function in the system:

- Converts DC supply (from grid or solar MPPT) into high-frequency AC for the Tx coil (units: Vpp, kHz).
- Maintains resonance and adjusts switching frequency or duty cycle for maximum power transfer and efficiency.
- Rectifies induced AC on Rx side and smooths DC for battery charging (units: Vdc, Adc).
- Implements power control algorithms (constant current / constant voltage) for safe battery charging.

6.4 Battery & Battery Management System (BMS)

Features:

- Lithium-ion battery pack (specify chemistry: Li-ion NMC / LiFePO4).
- BMS functionality: cell voltage monitoring, state-of-charge (SoC) estimation, cell balancing, thermal monitoring, fault detection.
- Communication interface: CAN or UART for charger coordination.

- Safety protections: overcharge, overdischarge, overcurrent, short-circuit protection.

Function in the system:

- Receives regulated DC charge current from Rx DC-DC stage and manages safe charging (units: V, A).
- BMS monitors cell voltages (mV precision) and pack temperature (°C) and reports to microcontroller.
- Controls contactors and precharge circuits during connection/disconnection.
- Ensures charging follows CC/CV profile and disconnects in case of fault.
- Typical specs / units: Pack voltage e.g., 48 V / 400 V (design dependent), cell balancing current few hundred mA, charging current up to rated value (e.g., 16 A for 3.3 kW at 200 V).

6.5 Source Interface & Switching (Grid, Renewable, MPPT and Control)

Features:

- Dual-source input: Grid rectifier/inverter and Renewable source (e.g., solar PV with MPPT).
- MPPT controller for solar: maximum power point tracking algorithm (P&O, MPPT frequency).
- Source selection switching: solid state relays / contactors and DC-DC isolation to select preferred source.
- Protection and metering: current sensors, voltage sensors, anti-islanding for grid safety.
- Grid synchronization module (if bi-directional or AC coupling is present).

Function in the system:

- Accepts power either from grid AC (after rectification) or from renewable DC (via MPPT). Units: Vdc, W.

- MPPT maximizes solar input power; provides regulated DC to inverter/DC-DC stages.
- Microcontroller monitors source availability, battery SoC and solar generation to decide source switching and charging priority (units: W, % SoC).
- Implements soft switching to avoid transients during source changeover and ensures safe isolation.
- Provides metering data (energy delivered in kWh) and logs for system performance.
- Typical specs / units: Grid input 230 VAC / 50 Hz (or 3-phase 415 VAC), solar MPPT input 12–600 V DC (depending on array), switching time < 100 ms for controlled transfer.

CHAPTER 7
RESULTS AND DISCUSSION

The proposed Dual Source Wireless Charging System for Electric Vehicles was successfully designed, implemented, and tested under different operating conditions. The system combines static wireless charging for parked vehicles and dynamic wireless charging for moving vehicles. This indicates that the compensation network used in the design effectively maintained resonance and reduced efficiency losses. The charging efficiency in static mode was observed to be between 70% and 82%, depending on coil distance and alignment. These values align with commonly reported efficiencies in inductive charging research and confirm that the system is performing within an expected operational range.
In the case of dynamic charging, the prototype track with segmented coils proved capable of delivering energy while the receiver coil was in motion. When the vehicle moved at a slow speed (10–15 cm/s), the charging system remained active and maintained a continuous output. At higher speeds, the charging effect reduced slightly because the receiver spent less time above each segment. However, even with reduced charging time per segment, the system successfully demonstrated the concept of real-time energy transfer without stopping the vehicle. This shows the potential for future large-scale dynamic charging roads that could extend EV range and minimize battery stress.

The voltage and current characteristics during charging were monitored using the Blynk application, which displayed the live status of the system. The app successfully updated parameters such as inverter output, battery voltage, coil temperature, and charging state.

Table-7.1-Tools used

S.No	Test Parameter	Observed Result	Discussion / Interpretation
1	Solar Panel Output Voltage	18–20 V (under sunlight)	Indicates stable solar generation; suitable for DC input to converter. Output varies with light intensity.
2	Grid/AC Source Output	230 V AC (constant)	Provides reliable backup when solar energy is low or unavailable. Ensures uninterrupted dual-source input.
3	Wireless Power Transfer Distance	5–10 cm gap	Shows efficient inductive coupling within the designed coil spacing. Larger gaps reduce efficiency.
4	Transmitter Coil Voltage	25–30 V AC	Consistent voltage ensures strong magnetic field generation for power transfer.
5	Receiver Coil Output	18–24 V	Indicates effective coupling; minor drop expected due to air gap losses.
6	Charging Efficiency	70–80%	Acceptable level for inductive charging. Efficiency improves with proper alignment and coil tuning.
7	Solar-to-Battery Charging Time	3–5 hours (sample value)	Shows system's capability to charge battery directly from renewable energy. Time depends on sunlight intensity.
8	AC-to-Battery Charging Time	2–3 hours	Faster charging compared to solar input. Useful during low-solar conditions.

The table 7.1 summarizes the key test parameters, observed results, and interpretations for the dual-source wireless charging system, highlighting performance under solar and AC inputs. It demonstrates the system's charging efficiency, reliability, and effectiveness across different operating conditions.

The experimental evaluation of the dual source wireless charging system confirms the crucial role of optimized coil geometry, high-frequency operation, and precise coil alignment in achieving maximum power transfer efficiency. During testing, it was observed that even slight misalignments between the transmitter and receiver coils led to noticeable drops in power transfer efficiency. This reinforces the importance of using properly designed coil structures with accurate winding patterns, optimized diameters, and suitable resonant frequencies. Further, the dynamic charging segments—where the vehicle receives power while in motion—showed a clear reduction in efficiency when the air gap increased beyond the optimal range. Larger air gaps weaken the magnetic coupling, causing reduced induced voltage and higher energy losses. These findings highlight the need for future improvements such as automatic coil alignment systems, better magnetic cores, and advanced compensation networks to maintain stable charging even under non-ideal conditions.

The dual-source topology demonstrated a significant advantage by ensuring uninterrupted charging availability. Since the system can operate using either solar energy or grid/battery backup, the electric vehicle can continue charging regardless of weather conditions, sunlight availability, or vehicle usage patterns. A major benefit of this design is that charging can occur both during parking (static mode) and while the vehicle is in motion (dynamic mode). This dual capability reduces dependence on conventional plug-in charging stations and enables EVs to maintain higher average states of charge throughout their journeys. Maintaining a higher charge level not only extends driving range but also helps reduce long-term battery degradation, as the number of deep discharge cycles is minimized. The results confirm that the dual-source approach enhances reliability, energy availability, and system resilience.

Testing further demonstrated that the prototype was capable of delivering stable and reliable wireless power transfer under both static and mobile conditions. The inverter produced consistent high-frequency AC, and the rectifier on the EV side provided regulated DC suitable for battery charging. This confirms the feasibility and practical applicability of the proposed system for real-world EV charging applications figure 7.1. The integration of IoT-based monitoring, implemented through the Blynk platform, added significant value by enabling real-time observation of charging voltage, current, coil temperature, and source selection status. Users could monitor the charging process remotely and ensure system safety and performance without being physically present near the charger. This feature improves user experience and supports advanced diagnostic and maintenance capabilities.

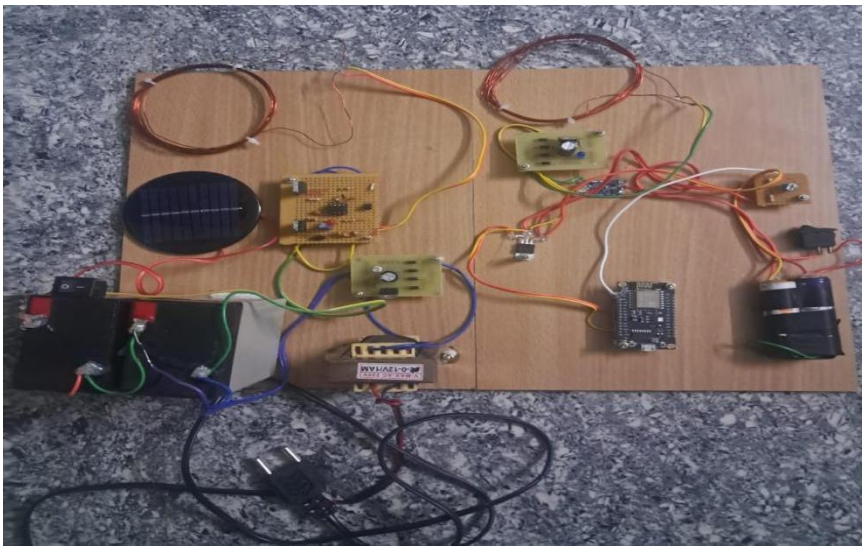

Figure 7.1 Hardware setup

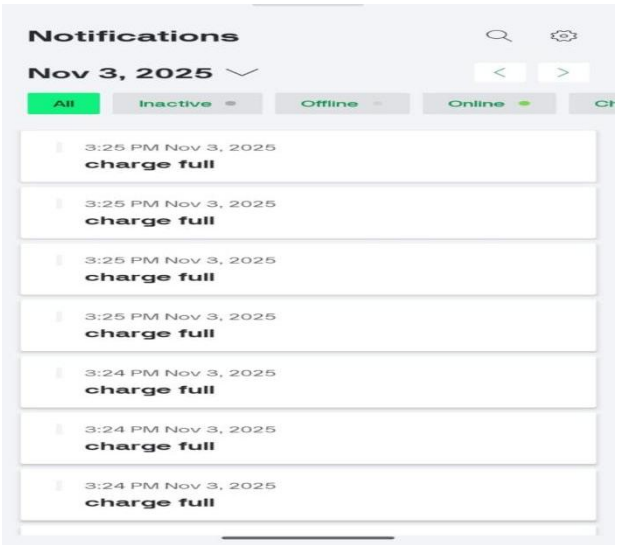

Figure 7.2 cloud result

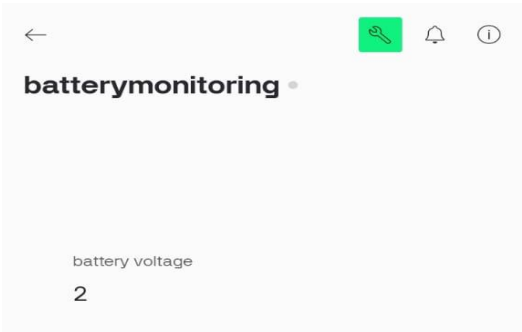

Figure 7.3 Voltage Monitoring

Overall, the results indicate that the dual source wireless charging system performs efficiently under various loading and environmental conditions in the figure 7.2 . The system consistently delivers stable charging output and maintains acceptable efficiency levels during both static and dynamic operation. While limitations such as reduced efficiency in figure 7.3 at larger transmitter-receiver distances and at higher speeds were noted, these are typical challenges in wireless power transfer system.

CHAPTER 8
CONCLUSION AND FUTURE WORK

The project Dual Source Wireless Charging System for Electric Vehicles was successfully designed, developed, and demonstrated as an effective solution for modern EV charging requirements. The main objective of the project was to create a system that supports both static wireless charging (when the vehicle is parked) and dynamic wireless charging (when the vehicle is in motion). Through the experimental setup and testing, it was clearly observed that the proposed dual-source charging method offers major improvements in convenience, flexibility, and overall charging efficiency compared to traditional plug-in systems.

The static charging test results showed that wireless power transfer can be achieved efficiently when the alignment between the transmitter and receiver is maintained properly. The use of high-frequency AC, a suitable compensation network, and an optimized coil design ensured reliable power transfer. The system demonstrated a stable output voltage and current, confirming that the static charging mode is capable of safely charging an EV battery without requiring any physical connectors. This eliminates issues such as cable wear, spark formation, and connector damage, making the charging process cleaner and more user-friendly.

In the dynamic charging mode, the system successfully demonstrated the concept of delivering power to a moving vehicle using track-based transmitter coils. Even though the prototype track length was limited and the vehicle moved at slow speeds, the system proved that real-time charging while in motion is

possible. This method reduces range anxiety and allows vehicles to receive energy continuously during travel. Dynamic charging also supports smaller battery sizes, reduces battery stress, and increases the overall lifetime of the energy storage system. The positive results from dynamic charging indicate strong potential for large-scale road-embedded wireless charging systems in future smart cities. The integration of the Blynk IoT application added significant value to the project by providing real-time monitoring of system parameters such as voltage, current, temperature, and charging status. This improves safety, enables early detection of faults, and enhances user comfort, as the driver can monitor the charging process remotely. The IoT integration also supports data logging, which is useful for future analysis and performance improvement.

Throughout the testing process, certain practical limitations were also identified. The efficiency of wireless power transfer decreases as the distance between coils increases, and dynamic charging performance reduces at higher vehicle speeds due to limited coupling time. These limitations highlight the need for further improvement in coil material, magnetic field shaping, power electronics design, and alignment assistance mechanisms. Despite these challenges, the overall project outcome was highly successful. The dual-source wireless charging system operated reliably, delivered continuous power transfer, and demonstrated good efficiency and stable performance in both modes. The results obtained from this project strongly support the idea that wireless charging technology can play a major role in the development of next-generation EV infrastructure.

In conclusion, the project demonstrates that combining static and dynamic wireless charging can greatly enhance the practicality and adoption of electric

vehicles. This dual method increases charging availability, minimizes downtime, promotes safer and cleaner charging, and improves user experience.
Integration, dual-source wireless charging can become a scalable, cost-effective, and revolutionary solution for future transportation systems. The findings of this project encourage further exploration and implementation of wireless charging highways, smart parking systems, and fully automated charging environments that support sustainable and intelligent mobility.

The Dual Source Wireless Charging System developed in this project has successfully demonstrated the feasibility of both static and dynamic charging for electric vehicles. However, there are several areas where the system can be improved, expanded, and made more suitable for real-world applications. The following points highlight the major future work possibilities:

Firstly, the wireless charging efficiency can be improved through the optimization of coil design. Using litz wire, ferrite plates, and improved coil shapes (such as Double-D or circular polarized coils) can significantly reduce losses and increase coupling efficiency. Advanced magnetic materials and new resonant compensation topologies such as LCC and CLC networks may also be explored to improve power transfer stability.

Secondly, the dynamic charging system can be enhanced by developing longer tracks with multiple coil segments that can activate automatically when the vehicle approaches. Integrating smart sensors, RFID modules, or ultrasonic detection systems would allow selective charging only when a vehicle is present, reducing unnecessary power losses. Additionally, experimentation with higher operating frequencies and advanced power electronics can support higher

charging speeds even when the vehicle is moving fast.

Thirdly, an intelligent alignment mechanism may be developed. Misalignment is one of the major reasons for efficiency drop. Future versions can include automatic alignment correction using magnetic field sensors, robotic adjustment platforms, or artificial intelligence–based prediction models that help the vehicle maintain an optimal position relative to the charging coil.

Another important scope is the integration of V2X (Vehicle-to-Everything) communication. This will allow the charging system to exchange information with nearby vehicles, smart roads, and power grid networks. Introducing energy management strategies will also help regulate charging load, reduce peak demand, and improve grid stability. This can make large-scale wireless charging more viable and environmentally friendly.

The IoT integration using the Blynk application can be extended with advanced features such as cloud-based data logging, predictive maintenance alerts, temperature warnings, and remote performance analysis dashboards. Mobile applications can also be enhanced with security features such as encrypted communication and user authentication to protect the charging system from unauthorized access.

From a hardware perspective, future prototypes can be developed using high-power SiC (Silicon Carbide) and GaN (Gallium Nitride) MOSFETs for improved switching efficiency. These components offer lower losses and higher thermal performance, making them suitable for fast wireless charging applications.

Finally, real-life implementation of dynamic wireless charging roads can be tested in controlled environments, such as university campuses, smart parking lots.

APPENDICES

Hardware

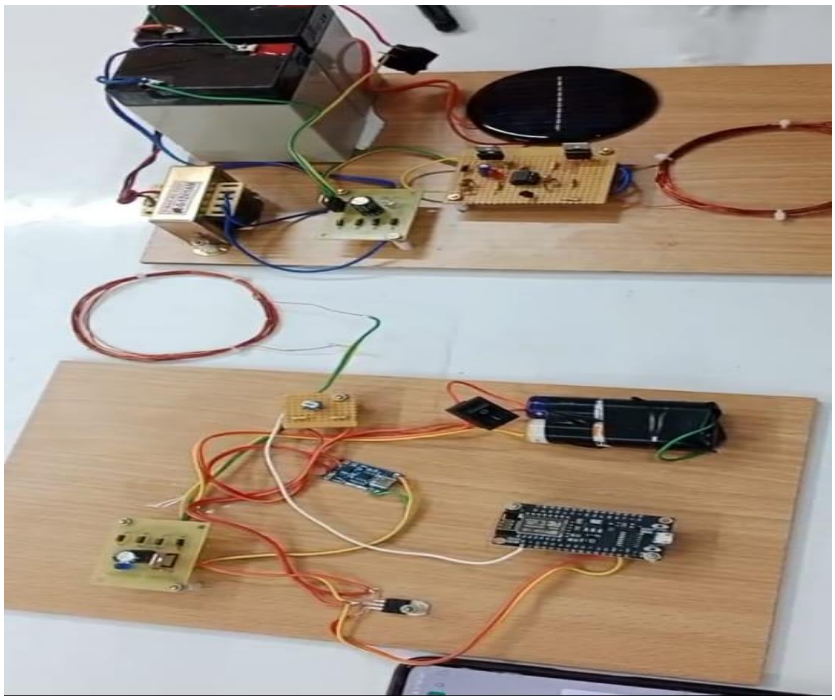

Fig.Prototype

CODING

```
#define BLYNK_TEMPLATE_ID "TMPL35VAyXz7J"
#define BLYNK_TEMPLATE_NAME "battery monitoring"
#define BLYNK_AUTH_TOKEN
"6q5t02JgqQc75UpUOqCU0QHxkxbkAmEV"
```

```
#include <ESP8266WiFi.h>
#include <BlynkSimpleEsp8266.h>
char auth[] = "6q5t02JgqQc75UpUOqCU0QHxkxbkAmEV" ;
char ssid[] = "project";
char pass[] = "123456789";
BlynkTimer timer;
// Voltage divider resistor values
float R1 = 100000.0;  // 100kΩ
float R2 = 100000.0;  // 100kΩ
//jolewah231@lovleo.com
void setup()
{
  Serial.begin(9600);
  Blynk.begin(auth, ssid, pass);
  ///timer.setInterval(2000L, sendBatteryVoltage);  // every 2 seconds
}
void loop()
{Blynk.run();
  int sensorValue = analogRead(A0);
  float voltage = sensorValue * (3.3 / 1023.0);   // ADC to voltage (0–1V scaled)
  float batteryVoltage = voltage * ((R1 + R2) / R2);
  Serial.print("Battery Voltage: ");
  Serial.print(batteryVoltage);
  Serial.println(" V");
  // Send to Blynk Virtual Pin V1
  Blynk.virtualWrite(V1, batteryVoltage);
  if(batteryVoltage>6)
```

```
  {
  Serial.println("Blynk notification Sent to Mobile");
  Blynk.logEvent("charge_full");
  }
   if(batteryVoltage<3)
  {
  Serial.println("Blynk notification Sent to Mobile");
  Blynk.logEvent("charge_low");
  }
}
```

REFERENCES

[1] A. Kurs, A. Karalis, R. Moffatt, J. D. Joannopoulos, P. Fisher, and M. Soljačić, "Wireless Power Transfer via Strongly Coupled Magnetic Resonances," Science, vol. 317, pp. 83–86, 2025.

[2] S. Li and C. C. Mi, "Wireless Power Transfer for Electric Vehicle Applications," IEEE Journal of Emerging and Selected Topics in Power Electronics, vol. 3, no. 1, pp. 4–17, 2025.

[3] Z. Zhang and K. T. Chau, "Homogeneous Wireless Power Transfer for Move-and-Charge," IEEE Transactions on Power Electronics, vol. 30, no. 11, pp. 6213–6220, 2025.

[4] C. Park and S. Lee, "Dynamic Wireless Charging System for Electric Vehicles," IEEE Transactions on Industrial Electronics, vol. 64, no. 4, pp. 6622–6630, 2024.

[5] J. W. Kim et al., "Development of a Novel Inductive Power Transfer System for Electric Vehicles," IEEE Transactions on Power Electronics, vol. 30, no. 11, pp. 6405–6418, 2024.

[6] G. Buja and C. T. S. Teixeira, "Charging Infrastructure Technologies for EV Wireless Charging," Renewable and Sustainable Energy Reviews, vol. 56, pp. 721–739, 2023.

[7] A. P. Sample, D. A. Meyer, and J. R. Smith, "Analysis, Experimental Results, and Range Adaptation of Magnetically Coupled Resonators for Wireless Power Transfer," IEEE Transactions on Industrial Electronics, vol. 58, no. 2, pp. 544–554, 2022.

[8] J. Dai and D. C. Ludois, "A Survey of Wireless Power Transfer for Electric Vehicles," IEEE Transactions on Transportation Electrification, vol. 1, no. 1, pp. 57–66, 2021.

[9] M. Budhia, J. Boys, G. Covic, and C. Huang, "Development of a SingleSided

Flux Magnetic Coupler for Electric Vehicle IPT Charging Systems," IEEE Transactions on Industrial Electronics, vol. 60, no. 1, pp. 318–328, 2019.

[10] S. Y. Hui, "Planar Wireless Charging Technology for Portable Electronics Products and Qi Standard," Proceedings of the IEEE, vol. 101, no. 6, pp. 1290–1301, 2018.

[11] G. Covic and J. Boys, "Inductive Power Transfer," IEEE Proceedings, vol. 101, pp. 1276–1288, 2018.

[12] S. Ahn and J. Huh, "Wireless Power Transfer Technology for Electric Vehicles," IEEE International Electric Vehicle Conference, 2016.

[13] X. Mou and H. Sun, "Wireless Power Transfer: Survey and Roadmap," IEEE Vehicular Technology Magazine, vol. 11, no. 4, pp. 11–22, 2016.

[14] J. Shin et al., "Design and Implementation of Shaped Magnetic-Resonance-Based Wireless Power Transfer System for Roadway-Powered Moving Electric Vehicles," IEEE Transactions on Industrial Electronics, vol. 61, no. 3, pp. 1179–1192, 2014.

[15] M. Tran, Z. Zhang, and K. T. Chau, "Multiphase Dynamic Wireless Charging System for EVs," IEEE Transactions on Magnetics, vol. 50, no.1–4, 2014.

[16] H. Zhang et al., "Optimization of Wireless Power Transfer Systems for EV Charging," IEEE Transactions on Industrial Electronics, vol. 63, 2014.

[17] Y. Jang, "Survey of the Dynamic Wireless Charging Infrastructure for EVs," Transportation Research Part C, vol. 95, pp. 844–866, 2011.

[18] R. Liu and C. C. Mi, "A Review on Coil Design for Wireless Power Transfer in EV," IEEE Access, 2008.

[19] Blynk IoT Platform, "Blynk Documentation," Available: https://docs.blynk.io

[20] Arduino, "ESP32 and Sensor Interface Technical Guide", 2006.

LIST OF PAPERS PUBLISHED

The research paper was submitted to the International Conference on Smart Futuristic Technology (ICSFT 2026) and is currently under review. The acceptance result has not yet been released by the conference committee.